Building Sketch (Page - 1)

Borrower							
Property Address	1309 Maryland Ave						
City	Durham	County	Durham	State	NC	Zip Code	27705
Lender/Client							

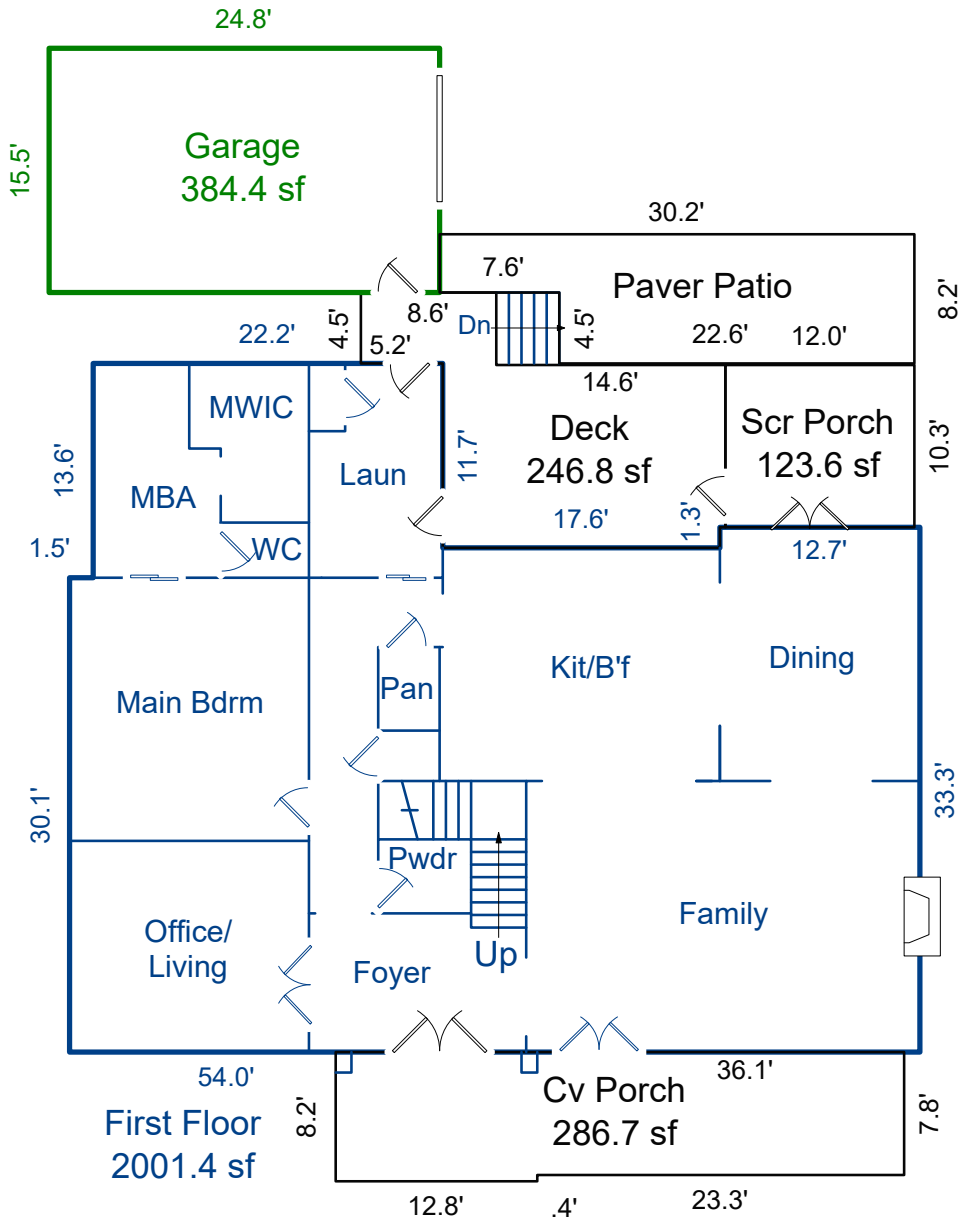

Sketch by ApexSketch

AREA CALCULATIONS SUMMARY

Code	Description	Factor	Net Size	Perimeter	Net Totals
GLA1	First Floor	1.0	2001.4	198.0	2001.4
GAR	Garage	1.0	384.4	80.6	384.4
P/P	Cv Porch	1.0	286.7	88.6	
	Scr Porch	1.0	123.6	44.6	
	Deck	1.0	246.8	78.7	
	Paver Patio	1.0	213.0	76.7	870.1
	Net LIVABLE	cnt	1	(rounded)	2,001

AREA CALCULATIONS BREAKDOWN

Name	Base	x	Height	x	Width	=	Area
First Floor			43.7	x	22.2	=	970.1
			32.0	x	30.3	=	969.6
			30.1	x	1.5	=	45.1
			12.7	x	1.3	=	16.5
4 total items					(rounded)		2,001

© iLOOKABOUT (US) Inc. dba Apex Software

Building Sketch (Page - 2)

Borrower							
Property Address	1309 Maryland Ave						
City	Durham	County	Durham	State	NC	Zip Code	27705
Lender/Client							

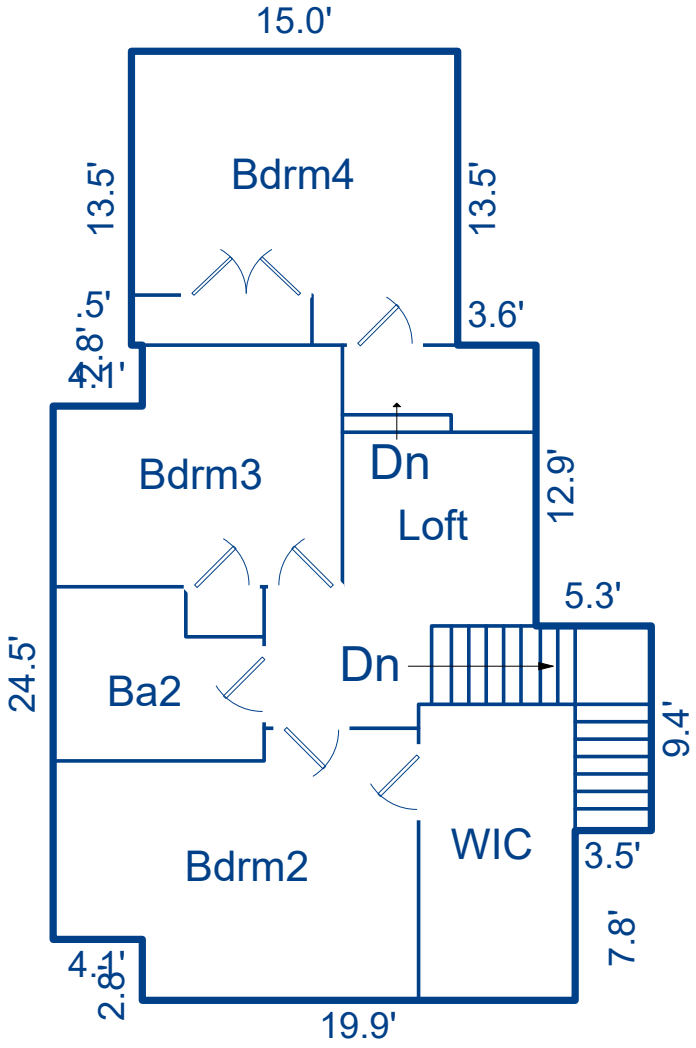

Second Floor
911.6 sf

Sketch by ApexSketch

AREA CALCULATIONS SUMMARY

Code	Description	Factor	Net Size	Perimeter	Net Totals
GLA2	Second Floor	1.0	911.6	143.2	911.6
	Net LIVABLE	cnt	1	(rounded)	912

AREA CALCULATIONS BREAKDOWN

Name	Base	x	Height	x	Width	=	Area
Second Floor			24.5	x	4.1	=	100.5
			15.0	x	13.5	=	202.5
			23.4	x	9.4	=	220.0
			19.9	x	7.8	=	155.2
			18.1	x	12.9	=	233.5
5 total items					(rounded)		912

© iLOOKABOUT (US) Inc. dba Apex Software

INVOICE

FROM:
Robert Thomas Appraisal Service
120 Shady Spring Pl
Durham, NC 27713

Telephone Number: 919 308-2549 Fax Number:

TO:
Adam Dickinson & Dahlia Walker

E-Mail: adam@501Realty.com dahlia@501realty.com
Telephone Number: 919 452-3751 Fax Number:
Alternate Number:

INVOICE NUMBER	
	260704S
DATES	
Invoice Date:	07/26/2026
Due Date:	
REFERENCE	
Internal Order #:	260704S
Lender Case #:	
Client File #:	
FHA/VA Case #:	
Main File # on form:	260704S
Other File # on form:	maryland - 1609 - s
Federal Tax ID:	
Employer ID:	

DESCRIPTION

Lender:
Purchaser/Borrower:
Property Address: 1309 Maryland Ave
City: Durham
County: Durham
Legal Description:

Client: Adam Dickinson

State: NC Zip: 27705

FEES	AMOUNT
Drawing for 1309 Maryland Ave	125.00
SUBTOTAL	125.00

PAYMENTS			AMOUNT
Check #:	Date:	Description:	
Check #:	Date:	Description:	
Check #:	Date:	Description:	
		SUBTOTAL	0
		TOTAL DUE	$ 125.00